EN: This Datasheet/Document is presented by the manufacturer.

Please visit our website for pricing and availability at www.hestore.hu.

THIS DRAWING IS UNPUBLISHED. RELEASED FOR PUBLICATION –,– .
© COPYRIGHT – By – ALL RIGHTS RESERVED.

LOC	DIST
AF	50

REVISIONS

P	LTR	DESCRIPTION	DATE	DWN	APVD
	F	REVISED PER ECR–13–005733	22AUG13	KH	PD

1 SUPPLIED IN LOOSE PIECE

3 SILVER 0.003048 [.000120] MIN.

4 FOREIGN PRODUCTION ONLY.

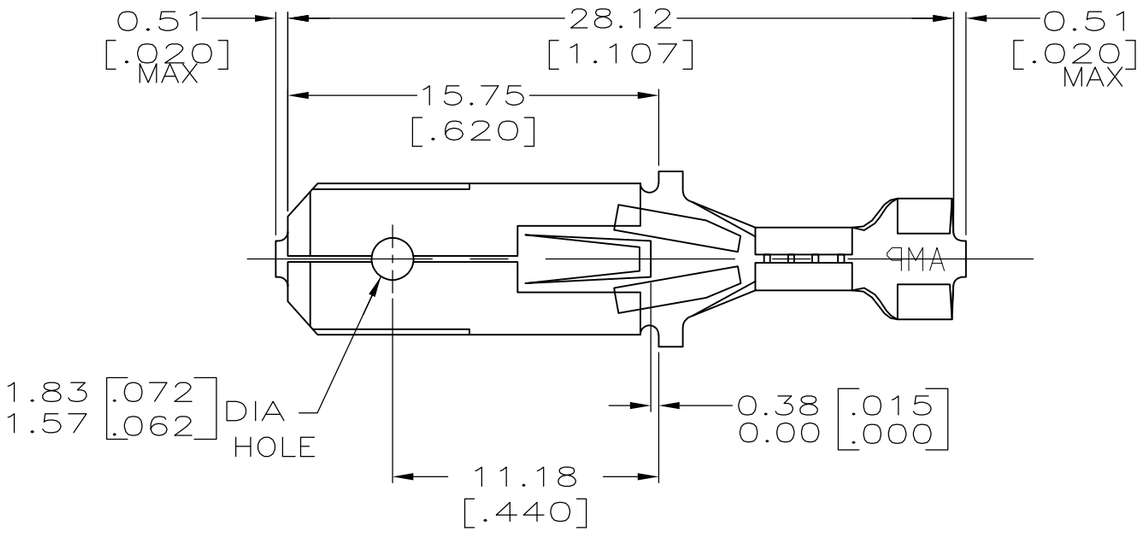

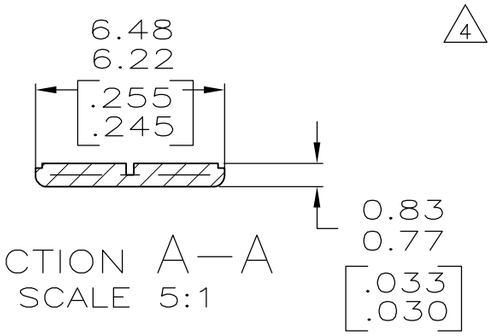

SECTION A–A
SCALE 5:1

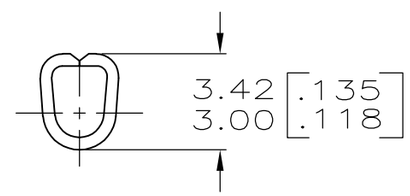

SECTION B–B
SCALE 5:1

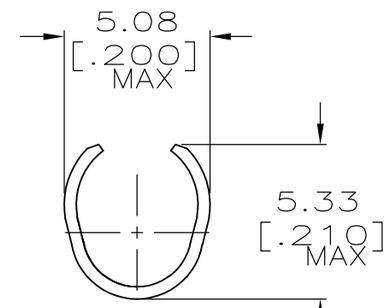

SECTION C–C
SCALE 5:1

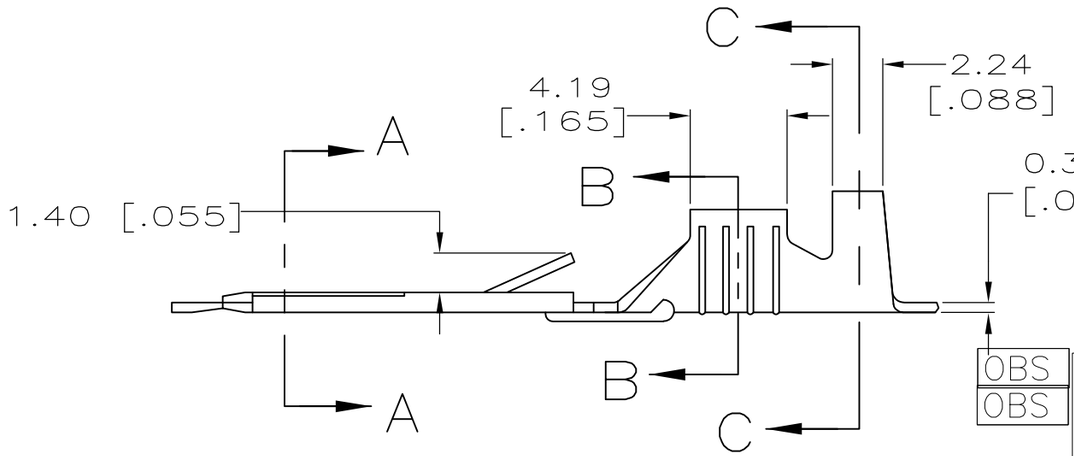

	INSULATION RANGE	WIRE SIZE	FINISH	MATERIAL	PART NO.
OBS	3.05–3.68 [.120–.145] DIA	#18–#16 AWG	TIN	082 PHOS BRZ	42565–4
OBS			SILVER 3	BRASS	4 42565–3
			TIN		42565–2
			–		42565–1

SUPERSEDED BY 42565–2

THIS DRAWING IS A CONTROLLED DOCUMENT.

DIMENSIONS: mm [INCHES]

TOLERANCES UNLESS OTHERWISE SPECIFIED:

0 PLC	± –
1 PLC	± –
2 PLC	± 0.38 [.015]
3 PLC	± –
4 PLC	± –
ANGLES	± –

MATERIAL: SEE TABLE

FINISH: SEE TABLE

DWN	JR RUTH	2/6/95
CHK	MS FEHER	2/6/95
APVD	J GILLESPIE	2/6/95
PRODUCT SPEC	–	
APPLICATION SPEC	–	
WEIGHT	–	

CUSTOMER DRAWING

TE Connectivity

NAME: TAB, FASTIN–FASTON, 6.35 [.250] SERIES –

SIZE	CAGE CODE	DRAWING NO	RESTRICTED TO
A3	00779	C–42565	–

SCALE	SHEET	REV
4:1	1 OF 1	F

1470–19 (3/11)