EN: This Datasheet/Document is presented by the manufacturer.

Please visit our website for pricing and availability at www.hestore.hu.

REV.	DESCRIPTION	DRAWN	CHECKED	APPROVED
A	NEW RELEASE	YCH 09/04/10'	~	

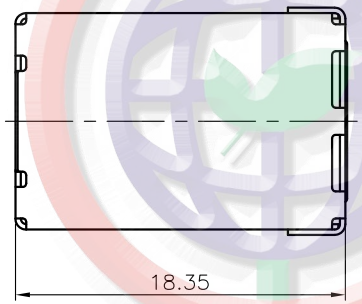

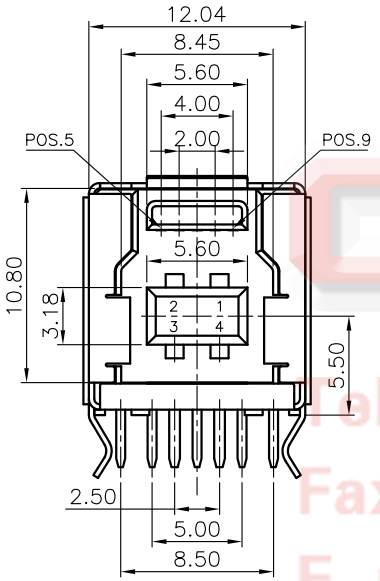

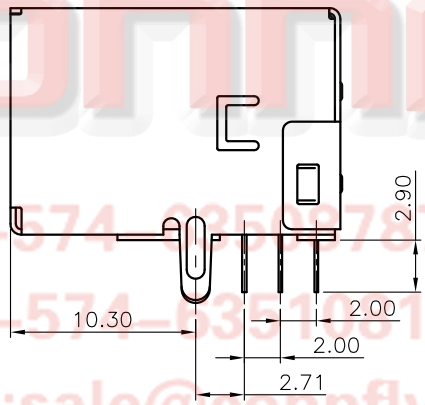

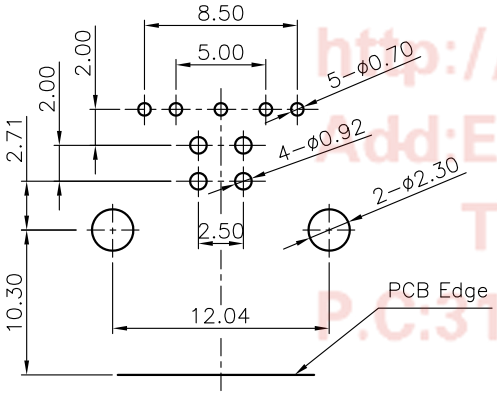

RECOMMEND PCB LAYOUT
TOLERANCE=±0.05

NOTES:

1. SPECIFICATIONS:
   - 1.0 CONTACT RESISTANCE: 30mΩ(max.) INITIAL FOR VBUS AND GND CONTACTS. 50mΩ(max.) INITIAL FOR ALL OTHER CONTACTS.
   - 1.1 INSULATOR RESISTANCE: 100MΩ min. AT 100V DC.
   - 1.2 CURRENT RATING: 1.8A FOR VBUS PIN AND ITS CORESPONDING GND PIN. 0.25A (MIN.) FOR ALL OTHER CONTACTS
   - 1.3 VOLTAGE RATING: 30V AC/DC.
   - 1.4 DIELECTRIC STRENGTH: AC 100V FOR 1 Minute.
   - 1.5 OPERATING TEMPERATURE: −40°C ~ +105°C.
2. MATERIALS:
   - 2.0 HOUSING: THERMOPLASTIC (UL 94−0).
   - 2.1 CONTACT: COPPER ALLOY
   - 2.2 SHELL: COPPER ALLOY.
3. PRODUCT NUMBER CODE:

DS1099−02 − X X X

- CONTACT PLATING
  - 0: Selective Gold Flash
  - 03: Selective Gold 3u"
  - 30: Selective Gold 30u"
- SHELL PLATING
  - N: Nickel
  - 6: Tin
- COLOR OF HOUSING:
  - L: Blue
  - W: White
  - B: Black

CONNFLY®
Tel:86-574-85598787
Fax:86-574-83510617
E-mail:sale@connfly.com
http://www.connfly.com
Add:East Industry Zone KuangYan
Town Cixi Ningbo China
P.C.315333

GENERAL TOLERANCE	ANGLE TOLERANCE
X. ±0.60	X. ±5°
.X ±0.38	.X ±3°
.XX ±0.25	.XX ±2°

DRAWING TYPE	CUSTOMER		
SCALE	1:1	SHEET	1 OF 1
DRAWING NO.	C−DS1099−02−XXX		

PROJECTION		TITLE	USB 3.0 B TYPE FEMALE R/A DIP TYPE
UNITS	mm		
SHEET SIZE	A4	SERIES	DS1099−02 SERIES

晨翔电子有限公司
CONNFLY ELECTRONIC CO. LTD