EN: This Datasheet/Document is presented by the manufacturer.

Please visit our website for pricing and availability at www.hestore.hu.

REV.	ECN NO.	DESCRIPTION	DRAW	CHECK	APPD.	DATE
A0	ECN120306011	新发行	xu dong bin	—	—	12-03-06
A1	ECN130801001	变更料号	WEI			13-08-01

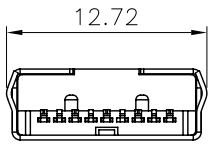

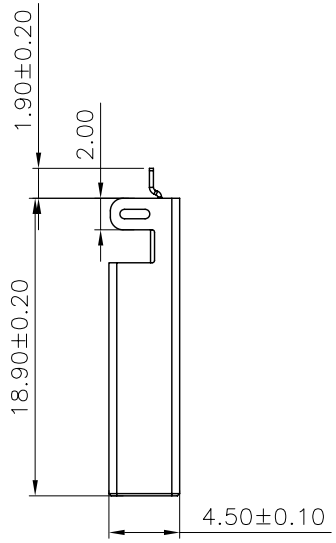

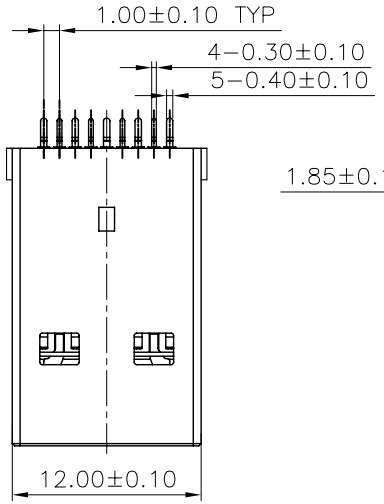

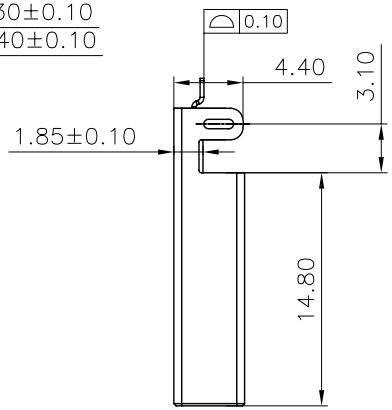

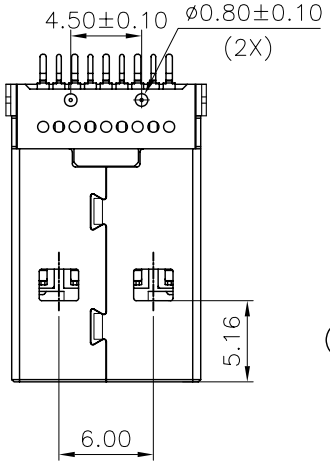

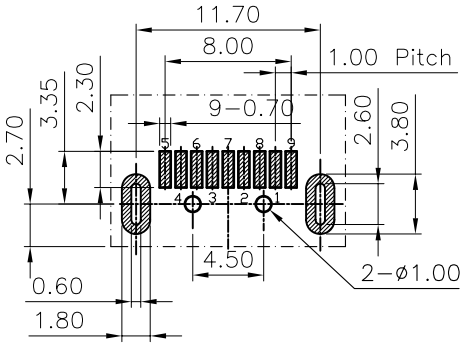

REFERENCE PCB LAYOUT

料号备注：

CU3M002MXXTXXR

"12"半金雾锡G/F
"15"半金雾锡15U"
"16"半金雾锡30U"

"00"--LCP

SPECIFCATIONS:
Contact current Rating:
1.8 Amperes for pin1&pin4.
0.25 Amperes other contacts
Dielectric Withstanding Voltage:AC 100V(RMS)
Insulation resistance:100Megohms Minimum.
Contact Resistance:
30mΩ Max for pin1&pin4
50mΩMax for other contacts
Mechanical Characteristics:
Mating Force:35 Newtoms.Maximum
Unmating Force:10 Newtoms.MInimum.
MATERIAL: 8N Min After Durability
Housing: LCP+30%GF 94V-0 COLOR:BLUE
Contact: copper alloy(T=0.25mm)
Shell: SPCC
PLATING:
Contact: Au Plated on contact area
Tin Plated on solder area
Nickel underplating over all
Shell: Nickel Plated
operating Temperature:-55°to+85°

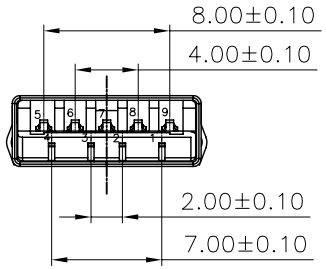

Pin NUMBER	SIGNAL NAME
1	VBUS
2	D-
3	D+
4	GND
5	StdA_SSRX-
6	StdA_SSRX+
7	GND_DRAIN
8	StdA_SSTX-
9	StdA_SSTX+
Shell	Shield

UNLESS OTHERWISE SPECIFIED TOLERANCES

	METRIC
X. +/-	0.30
.X +/-	0.25
.XX +/-	0.25
FRACTIONS +/-	
ANGLES +/-	2.00°

DIMENSIONS (METRIC) (MM)

APPROVAL		日期
制图	WEIMINGJUN	2012.03.06
审核	xudongbin	2012.03.06
核准	xudongbin	2012.03.06

文件位置

ANGLE OF PROJECTION

品名规格	USB AM 3.0 SMT L=1.9 K脚
料号	SEE TABLE
字张	A4
工程图号:	DWG-USBAM-012
版本.	A1
比例	1 : 1
状态码	A
页数	1 OF 1