EN: This Datasheet/Document is presented by the manufacturer.

Please visit our website for pricing and availability at www.hestore.hu.

MARK	DATE	REMARKS
△1		
△2		

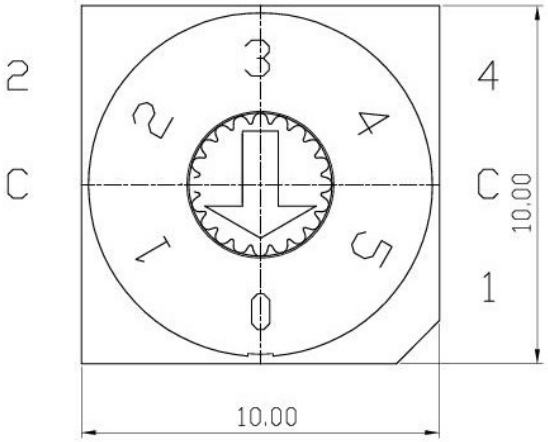

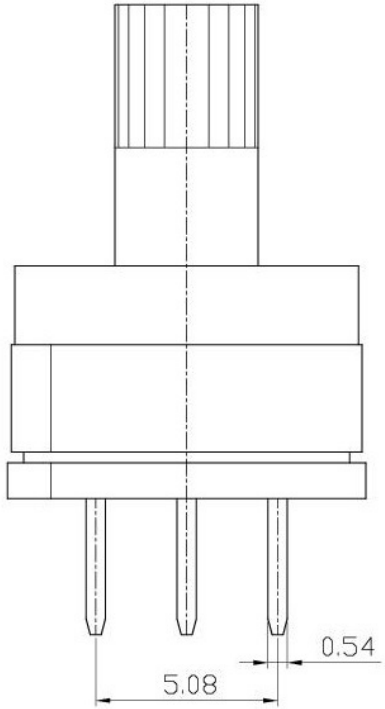

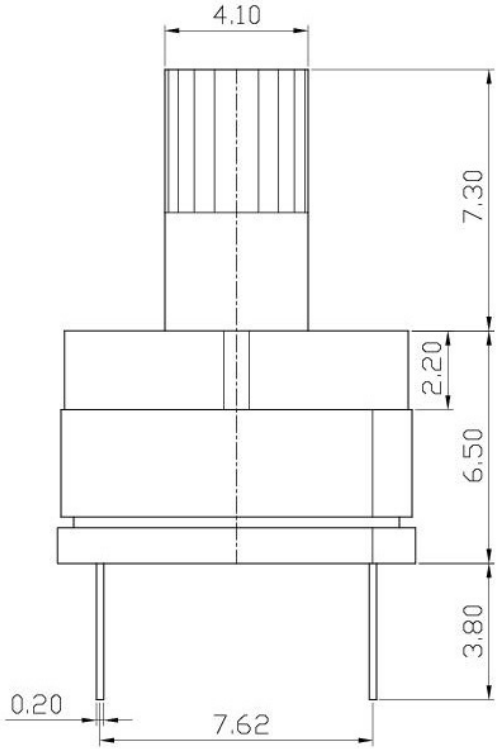

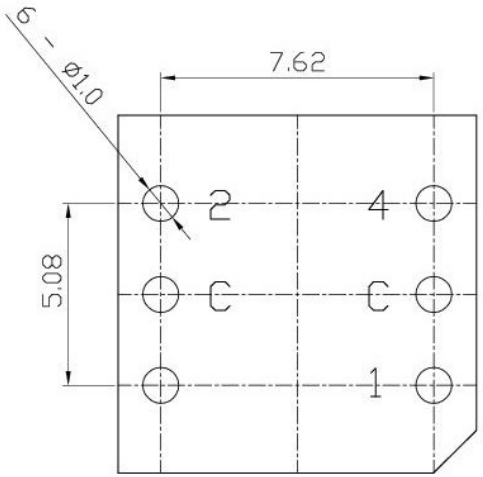

P.C.B DIMENSION

SPECIFICATION

1. Rating : 150mA, 42V DC (Switching)
   200mA, 42V DC (None-Switching)
2. Contact Resistance : 80mΩ Max
3. Insulation Resistance : 100MΩ Min
4. Operating Force : 700gf Max
5. Life cycle : 10,000 steps

		Real Coded				
		C	1	2	4	8
6 Position	0	●				
	1	●	●			
	2	●		●		
	3	●	●	●		
	4	●			●	
	5	●	●		●	

APPD	CHKD	D'SGD	TITLE.	ROTARY DIP SWITCH	
K.L LEE	J.P ROH	J.S SIN	MODEL NO.	TSR-06	REV A
			SUNGMUN ELECTRONICS CO., LTD.		