EN: This Datasheet/Document is presented by the manufacturer.

Please visit our website for pricing and availability at www.hestore.hu.

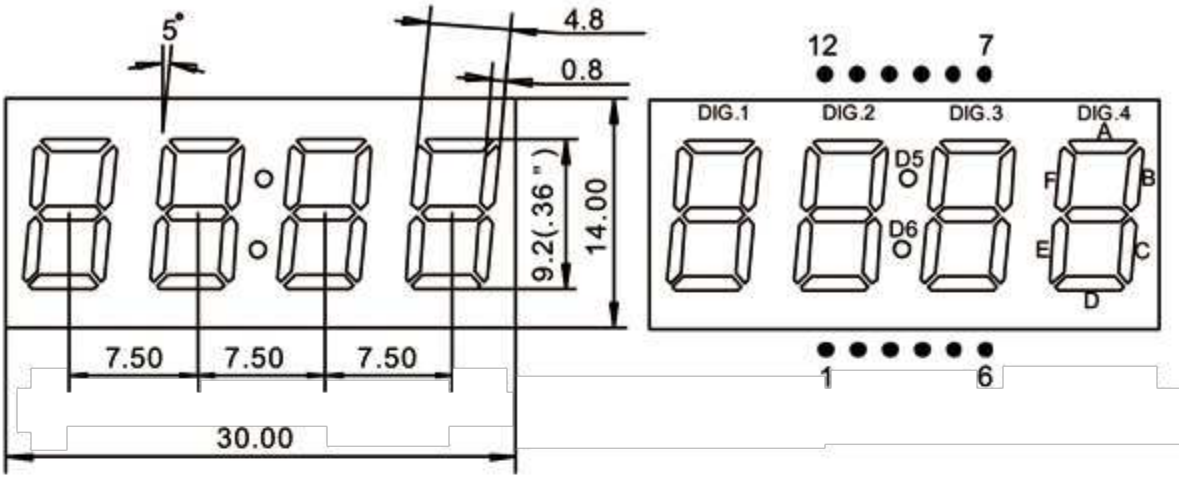
5°
4.8
0.8
9.2(.36")
14.00
7.50
7.50
7.50
30.00
12
7
DIG.1
DIG.2
DIG.3
DIG.4
D5
D6
A
B
C
D
E
F
1
6

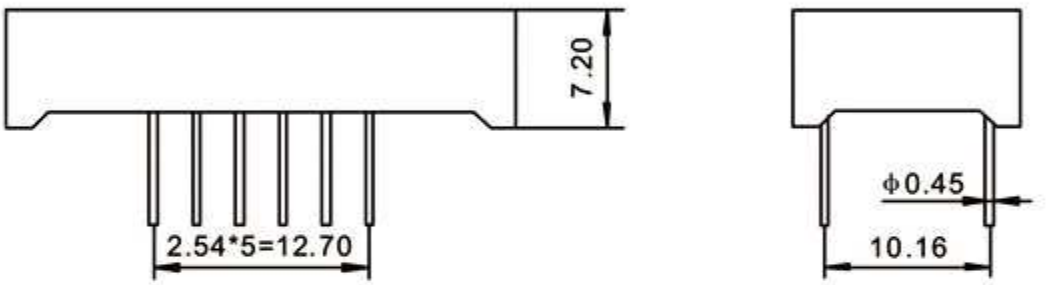
7.20
2.54*5=12.70
Φ0.45
10.16

3462A

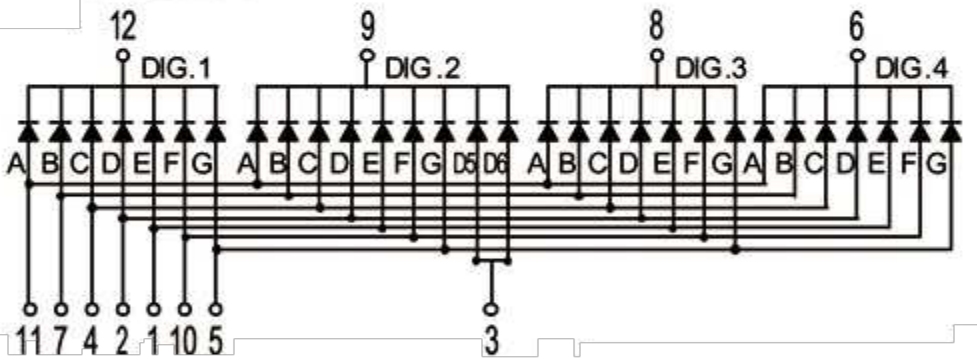
12
9
8
6
DIG.1
DIG.2
DIG.3
DIG.4
A B C D E F G
A B C D E F G D5 D6
A B C D E F G
A B C D E F G
11 7 4 2 1 10 5
3

3462B

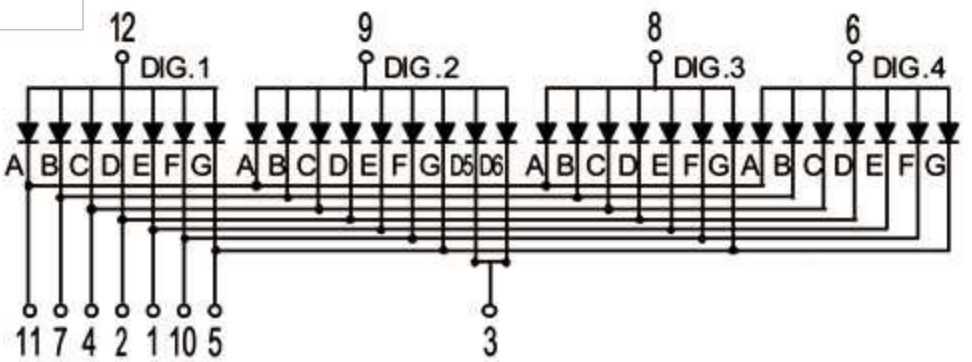
12
9
8
6
DIG.1
DIG.2
DIG.3
DIG.4
A B C D E F G
A B C D E F G D5 D6
A B C D E F G
A B C D E F G
11 7 4 2 1 10 5
3