SPECIFICATION

Product Name	VARIABLE RESISTOR
Model No.	VG039NCHXT
Control No.	412
Date	January 9, 2007

HOKURIKU ELECTRIC INDUSTRY CO., LTD.
COMPONENTS DIVISION
ELECTRO-MECHANICAL COMPONENT FACTORY

SALES DEPARTMENT
Sales Representative
Approved

ELECTRO-MECHANICAL COMPONENT FACTORY	
Drawn	*N.Kurata*
Checked	*M.Kanagawa*
Checked	*H.Takabayashi*
Approved	*T.Nakayama*

The contents of this specification may change without prior notice. For inquiries, please refer to product name, model No., and control No. written in the cover sheet of this specification. Because this specification is for reference only, for your actual use of this part please acknowledge and sign the formal specification for this part.

1. Scope

This specification applies to 3 mm Chip trimmer potentiometer with Metal - Glaze - Resistor, used in electronic equipment.

2. Construction (Dimensions and Materials) and Rating

2.1. Dimension — See attached Drawing.

2.2. Materiales — See attached Material List

2.3. Operating Temperature Range — -40 ℃～+100 ℃

② 2.4. Storage Temperature Range — -10 ℃～+40 ℃

2.5. Nominal Total Resistance Range — 100 Ω ～ 1 MΩ
(1・2・3・5 series , see attached Application List)

2.6. Total Resistance Tolerance — ±25 %

2.7. Power Rating — 0.1 5 W (～+70 ℃)
Power rating vs. ambient temperature shall be denoted on the following chart.

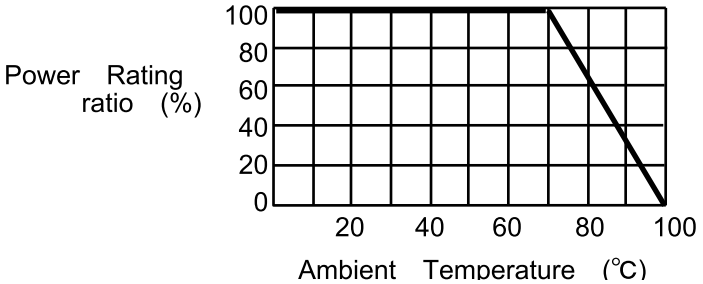

2.8. Rated Voltage — Rated Voltage $E=\sqrt{P \cdot R}$

Where P : Power Rating (W)
R : Nominal Total Resistance (Ω)

When the rated voltage exceeds the maximum operating voltage, the maximum operating voltage shall be the rated voltage.

2.9. Maximum Operating Voltage — 50 V

③		⑥	
②	Review Item 2.4, 3.3.2 2006.11.11 H.Takabayashi	⑤	
①	Add Item 5.4 and review Item 5. 2006.8.2 H.Takabayashi	④	

DRAWN	CHECKED	APPROVALS	TITLE	HDK TYPE	REV.
N.Kurata DATE Oct./11/'06	H.Takabayashi DATE Oct./11/'06	M.Urayama DATE Oct./11/'06	VARIABLE RESISTOR	VG039NCH	B
DATE Oct. ,11, 2006	HOKURIKU ELECTRIC INDUSTRY CO.,LTD.			HDK. DWG. NO. W-6522	1/7

3. Characteristics

Standard atmospheric conditions

Unless otherwise specified, the standard range of atmospheric conditions for making measurements and tests is as follows :

Ambient temperature : 5 ℃ to 35 ℃
Relative humidity : 45 % to 85 %
Air pressure : 860 hPa to 1 060 hPa

If there is any doubt about the results, measurements shall be made within the following limits :

Ambient temperature : 20 ℃±2 ℃
Relative humidity : 60 % to 70 %
Air pressure : 860 hPa to 1 060 hPa

3.1. Mechanical characteristics

	Item	Conditions	Specifications
1	Total Mechanical Rotation		270 ° ±20 °
2	Rotational Torque		0.98 mN･m ～ 11.76 mN･m
3	End Stop Strength	The following torsion moment of 14.7 mN・m shall be applied to the spindle for 5 seconds in any direction.	Without distinct looseness or poor contact.
4	Soldering Strength	A static load shown in this figure shall be applied to terminals for 30 s after soldering. 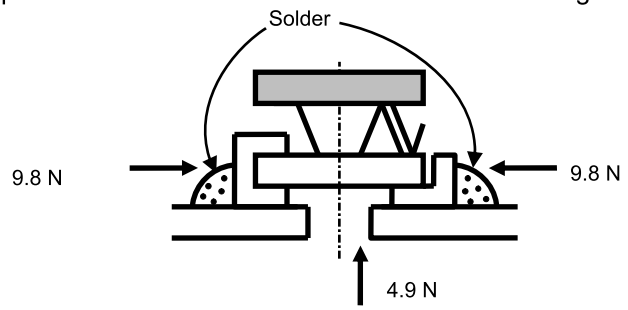	Without distinct looseness or poor contact.
5	Push Load	A push load of 9.8 N shall be applied to the axial direction for 30 seconds from upper part of the product.	Without distinct looseness or poor contact. Without board breaking.

3. Characteristics

3.2. Electrical characteristics

	Item	Conditions		Specifications
1	Resistance Law (Taper)	Output voltage ratio at the middle of total rotational angle.		40 %～60 % (Linear taper)
2	Ineffective Rotation	Ineffective rotation is the sum of all rotational distances in which resistance does not change and is calculated as a percentage of the total mechanical rotation.		10 % or less of total mechanical rotation, at each end.
3	Residual Resistance	The resistances at each end of the mechanical rotation between terminals 1 and 2, or 2 and 3 shall be measured.	Total nominal resistance 1 kΩ or less	20 Ω or less
			Total nominal resistance more than 1 kΩ	2 % or less of total nominal resistance.
4	Contact Resistance	The moving contact shall be rotated to a point where the resistance between terminals 1 and 2 is half of the total resistance. Contact resistance shall be calculated by the following formula : $\frac{(R12+R23)-R13}{2\times R13}\times 100(\%)$ Where R12 : Resistance between terminals 1 and 2 R23 : Resistance between terminals 2 and 3 R13 : Resistance between terminals 1 and 3		5 % or less of nominal total resistance.
5	Temperature Coefficient (T. C. R.)	The trimmer potentiometer shall be maintained in a thermostatic chamber at a temperature, according to the table as shown below.		Within ±250 ppm/℃

Step	Temperature(℃)
Initial	+25±2
1	-40±3
2	+25±2
3	+100±3

The mesurement shall be made, after the thermostatic chamber achieved the mark temperature and maintained for 30 min ～ 45min.

3.3. Endurance characteristics

When the items in ★mark, the moving contact shall be rotated to a point where the resistance between 1 and 2 is half of the total resistance.

	Item	Conditions	Specifications
1 ★	Vibration	The entire frequency range, from 10 Hz to 55 Hz and return to 10 Hz, shall be transversed in 1 min. Amplitude (total excursion) : 1.5 mm This motion shall be applied for a period of 2 h in each of 3 mutually perpendicular directions. (a total of 6 h)	Change in resistance between 1 and 2 is relative to the value before test . Within ±5 % Without an instant open during the test.
② 2 ★	Resistance to Soldering Heat	Re-flow soldering method Peak temperature : Within 260 ℃ 10 s Application time : more than 230 ℃, Within 40 s Soldering iron method Tip temperature : 400 ℃±10 ℃ Application time of soldering iron : 3 s +1 s /−0 s.	Within ±2 % of initial resistance.
3 ★	High Temperature Storage	The trimmer potentiometer shall be subjected in a thermostatic chamber at a temperature of 70 ℃±2 ℃ without electrical load for 1 000 h± 12 h. Then the trimmer potentiometer shall be taken out from the chamber and maintained at standard atmospheric conditions for 1 h ～ 2 h, after which measurements shall be made.	Change in total resistance is relative to the value before test. Within ±5 %
4 ★	Load Life	The trimmer potentiometer shall be subjected in a thermostatic chamber at a temperature of 70 ℃±2 ℃ with a DC rated voltage for 1.5 h between terminals 1 and 3 followed by a pause of 30 min for 1 000 h±12 h. Then the trimmer potentiometer shall be taken out from the chamber and maintained at standard atmospheric conditions for 1 h ～ 2 h without electrical load, after which measurements shall be made.	Change in total resistance is relative to the value before test. Within ±5 %
5 ★	Temperature Cycle	The trimmer potentiometer shall be subjected in a thermostatic chamber at 5 successive change of temperature cycles, each as shown in table below. Then the trimmer potentiometer shall be taken out from the chamber and maintained at standard atmospheric conditions for 1 h ～ 2 h, after which measurements shall be made.	Change in total resistance is relative to the value before test. Within ±2 % Without distinct looseness or poor contact.

Step	Temperature	Duration
1	−40 ℃±3 ℃	30 min
2	Standard atmospheric conditions	10 min to 15 min
3	100 ℃±2 ℃	30 min
4	Standard atmospheric conditions	10 min to 15 min

③		⑥	
②		⑤	
①		④	

DRAWN	CHECKED	APPROVALS	TITLE	HDK TYPE	REV.
N.Kurata DATE Oct./11/'06	H.Takabayashi DATE Oct./11/'06	M.Urayama DATE Oct./11/'06	VARIABLE RESISTOR	VG039NCH	B
DATE Oct. ,11, 2006	HOKURIKU ELECTRIC INDUSTRY CO.,LTD.			HDK. DWG. NO. W-6522	4/7

	Item	Conditions	Specifications
6 ★	Humidity	The trimmer potentiometer shall be subjected in a thermostatic chamber at a temperature of 40 ℃± 2 ℃ with relative humidity of 90% to 95% without electrical load for 1 000 h±12 h. Then the trimmer potentiometer shall be taken out from the chamber and its surface moisture shall be removed. And then the trimmer potentiometer shall be maintained at standard atmospheric conditions for 1 h ～ 2 h, after which measurement shall be made.	Change in total resistance is relative to the value before test. Within ±5 %
7 ★	Humidity Load Life	The trimmer potentiometer shall be subjected in a thermostatic chamber at a temperature of 40 ℃± 2 ℃ and a relative humidity of 90 % to 95 % with a DC rated voltage for 1.5 hours between terminals 1 and 3 followed by a pause of 30 minutes for 1 000 h±12 h. Then the trimmer potentiometer shall be taken out from the chamber and its surface moisture shall be removed. And then the trimmer potentiometer shall be maintained at standard atmospheric conditions for 1 h ～ 2 h without electrical load, after wihch measurement shall be made.	Change in total resistance is relative to the value before test. Within ±5 %
8	Rotational Life	The moving contact shall be rotated without electrical load for 20 cycles±2 cycles at a rate of 10 min^{-1}. (A cycle of operation is defined as the travel of the moving contact from one end of the resistance element to the other and back through 90 % of the total mechanical rotation .)	Change in total resistance is relative to the value before test. Within ±10 %

4. Marking

Nominal total resistance ・・・・・ First number shows significant figures and the other shows quantity of zero.

ex. 1 kΩ ・・・・ 13
10 kΩ ・・・・ 14
100 kΩ ・・・・ 15

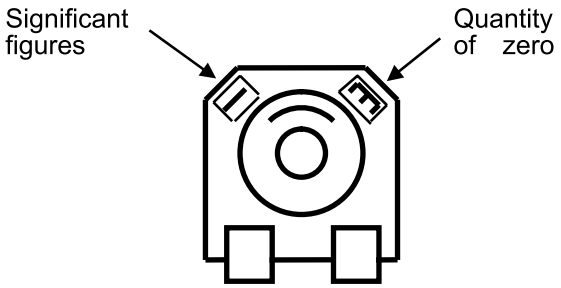

13 (1 kΩ)

③		⑥	
②		⑤	
①		④	

DRAWN	CHECKED	APPROVALS	TITLE	HDK TYPE	REV.
N.Kurata Oct./11/'06 DATE	H.Takabayashi Oct./11/'06 DATE	M.Urayama Oct./11/'06 DATE	VARIABLE RESISTOR	VG039NCH	B
Oct. ,11, 2006	HOKURIKU ELECTRIC INDUSTRY CO.,LTD.			W-6522	5/7

① 5. The others

5.1. Preset Position

The moving contact set half position of total rotation angle (50 %±15 % of total rotation angle) on delivery.

5.2. Application Notes

- The soldering for this product should be reflow soldering. Please note that this product is not applicable to flow soldering.
- Be careful with flying flux in soldering.
- If flux was stuck on the resistance, please wash it out thoroughly by alcoholic solvent.
- Handle the trimmer potentiometer with care.
- This product is not what meant the use to affect the human body life which needs advanced safety and reliability, and the use of nuclear relation, and carried out design manufacture.
- Please refer to EIAJ RCR-2191A "notes guideline(safe application guide of a potentiometer) of the potentiometer for electric devices" about notes on other use.
- In a case where there is a wiring pattern right under this product after mounting. Please be sure to do some insuration measures on the pattern with a resist or some other materials.

5.3. The wish matter of the consideration to the safety of a product

Although we are exerting our best effects to maintain the quality of this product, we cannot guarantee that they will never cause short circuiting and open circuitry.
Therefore, when designing an equipment or device with which the priority is given to the safety, you will please carefully study the influences to the whole equipment of a single function failure of potentiometer in advance to make out a fail-safe design providing.

5.4. Industrial Proprietorship

If the trouble on industrial proprietorship (related on delivered product ' s design and production) happens, we solves it on own responsibility.

5.5. Nation of products

CHINA

6. Taping Specification

6.1. Dimension ..... Dwg. No.F-362.022
6.2. Taping direction ..... Dwg. No.F-362.022 and Fig.2
6.3. Peeling strength of cover tape ..... 0.1 N～0.7 N
6.4. Taping method Fig.1
6.5. Taping quantity ..... 2 500 pcs./reel

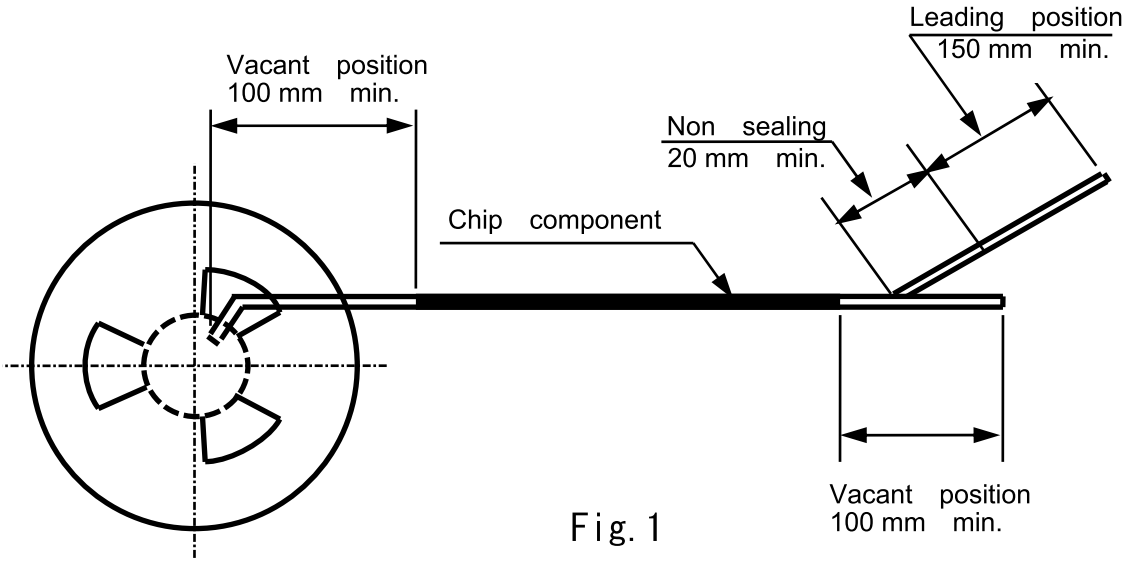

Fig. 1

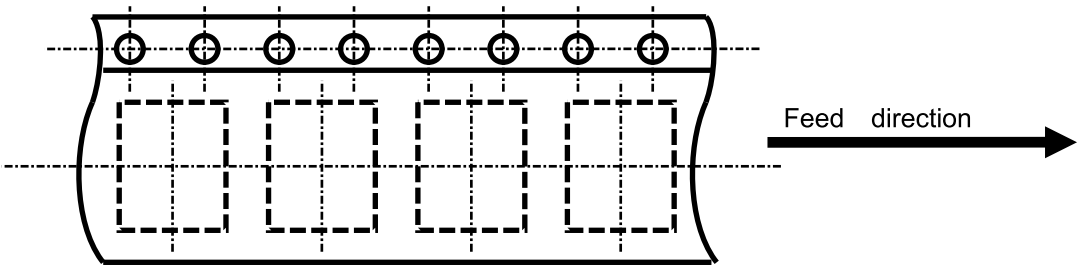

Fig2

③			⑥		
②			⑤		
①			④		
DRAWN N.Kurata DATE Oct./11/'06	CHECKED H.Takabayashi DATE Oct./11/'06	APPROVALS M.Urayama DATE Oct./11/'06	TITLE VARIABLE RESISTOR	HDK TYPE VG039NCH	REV. B
DATE Oct. ,11, 2006	HOKURIKU ELECTRIC INDUSTRY CO.,LTD.			HDK. DWG. NO. W-6522	7/7

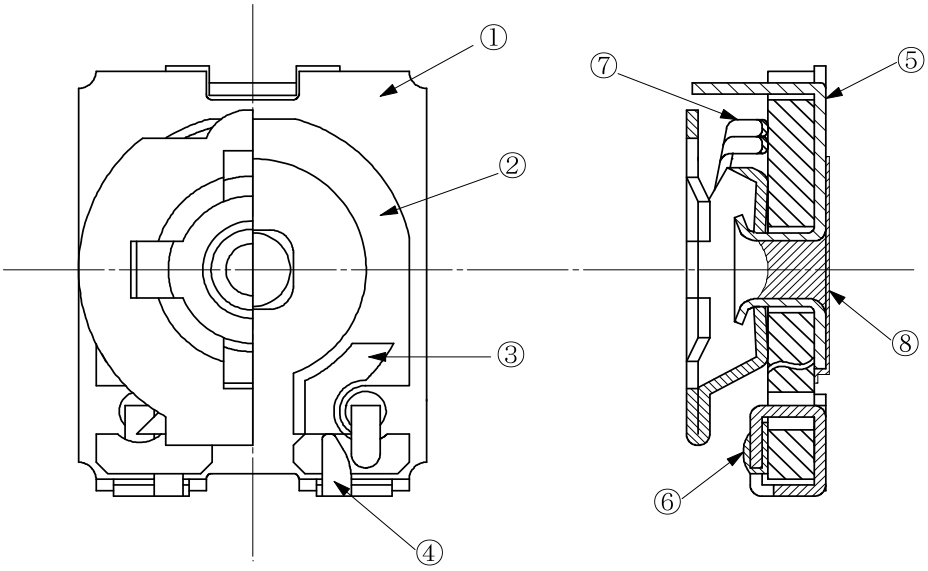

	No.	PART NAME 部 品 名	BASE MATERIAL 材　質	PLATING 処　理	
	1	BOARD 基　板	CERAMIC Al_2O_3 セラミック（アルミナ）		
	2	RESISTOR 抵 抗 体	METAL GLAZE COATING メタルグレーズ皮膜		
	3	ELECTRODE 電　極	AgPd 銀パラジウム		
	4	1st, 3rd TERMINAL 1番, 3番　端　子	STEEL 鋼　板	UNDER PLATING Ni : 0.5～2 μm 下地ﾒｯｷ SURFACE PLATING Sn : 2 μm ～ 4 μm 表面ﾒｯｷ	②
	5	2nd TERMINAL 2番　端　子	STEEL 鋼　板	UNDER PLATING Ni : 0.5～2 μm 下地ﾒｯｷ SURFACE PLATING Sn : 2 μm ～ 4 μm 表面ﾒｯｷ	②
	6	TERMINAL JOINT 端子接合部	SOLDER (Sn-3Ag-0.5Cu) 鉛フリー半田		
	7	MOVING CONTACT 摺 動 子	STAINLESS STEEL ステンレス		
①	8	SEALING RESIN 封止樹脂	ACRYL アクリル系		

	訂正日/Date	訂 正 理 由 / Reason of Correction	訂正者/Corrector	記 事 / Account
⑥				
⑤				
④				
③				
②	2007.1.9	下地メッキ厚変更 Correction Under Plating Thickness	高林	
①	2006.12.21	No.8 部品名変更 Correction Part Name No.8	高林	

承認/Approved	検図/Checked	設計/Designed	写図/Drawn	文書名 / Title	種別 / HDK TYPE	版/Rev.
浦山 M. Urayama		高林 H. Takabayashi		使用材料表 / Material List	VG039NCH	B

作成日 / Original Date		仕様書番号 / DWG.NO.	SHEET
2006/8/26	北陸電気工業　株式会社 HOKURIKU ELECTRIC INDUSTRY CO., LTD.	W-6502	1/1

FF No. 3026A

適 用 品 一 覧 表 /Apprication List

（適用外形寸法図/Drawing : F-362.021,F-362.022 ）

Rev.	公称全抵抗値 Nominal Total Resistance	抵抗値許容差 Tolerance	残留抵抗値/Residual Resistance 1-2 間 Between Terminal #1& #2	2-3 間 Between Terminal #2& #3	品 番 Part Number	備 考 Remark
	B100 Ω	±25 %	20 Ωmax	20 Ωmax		VG039NCHXT B101
	B200 Ω					B201
	B220 Ω					B221
	B300 Ω					B301
	B330 Ω					B331
	B470 Ω					B471
	B500 Ω					B501
	B680 Ω					B681
	B1 kΩ					B102
	B2 kΩ		40 Ωmax	40 Ωmax		B202
	B2.2 kΩ		44 Ωmax	44 Ωmax		B222
	B3 kΩ		60 Ωmax	60 Ωmax		B302
	B3.3 kΩ		66 Ωmax	66 Ωmax		B332
	B4.7 kΩ		94 Ωmax	94 Ωmax		B472
	B5 kΩ		100 Ωmax	100 Ωmax		B502
	B6.8 kΩ		136 Ωmax	136 Ωmax		B682
	B10 kΩ		200 Ωmax	200 Ωmax		B103
	B20 kΩ		400 Ωmax	400 Ωmax		B203
	B22 kΩ		440 Ωmax	440 Ωmax		B223
	B30 kΩ		600 Ωmax	600 Ωmax		B303
	B33 kΩ		660 Ωmax	660 Ωmax		B333
	B47 kΩ		940 Ωmax	940 Ωmax		B473
	B50 kΩ		1 kΩmax	1 kΩmax		B503
	B68 kΩ		1.36 kΩmax	1.36 kΩmax		B683
	B100 kΩ		2 kΩmax	2 kΩmax		B104
	B200 kΩ		4 kΩmax	4 kΩmax		B204
	B220 kΩ		4.4 kΩmax	4.4 kΩmax		B224
	B300 kΩ		6 kΩmax	6 kΩmax		B304
	B330 kΩ		6.6 kΩmax	6.6 kΩmax		B334
	B470 kΩ		9.4 kΩmax	9.4 kΩmax		B474
	B500 kΩ		10 kΩmax	10 kΩmax		B504
	B680 kΩ		13.6 kΩmax	13.6 kΩmax		B684
	B1 MΩ		20 kΩmax	20 kΩmax		B105

	訂正日/Date	訂 正 理 由 / Reason of Correction	記 事 / Account
⑥			
⑤			
④			
③			
②			
①			

承認/Approved	検図/Checked	設計/Designed	写図/Drawn	文書名 / Title	種別 / HDK TYPE	版/Rev.
浦山 M. Urayama		高林 H. Takabayashi		製品規格 / Variable resistor	VG039NCHXT	

作成日 / Original Date		仕様書番号 / DWG.NO.	SHEET
2006/8/28	北陸電気工業 株式会社 HOKURIKU ELECTRIC INDUSTRY CO., LTD.	W-6500	1/1

FF No. 3026A

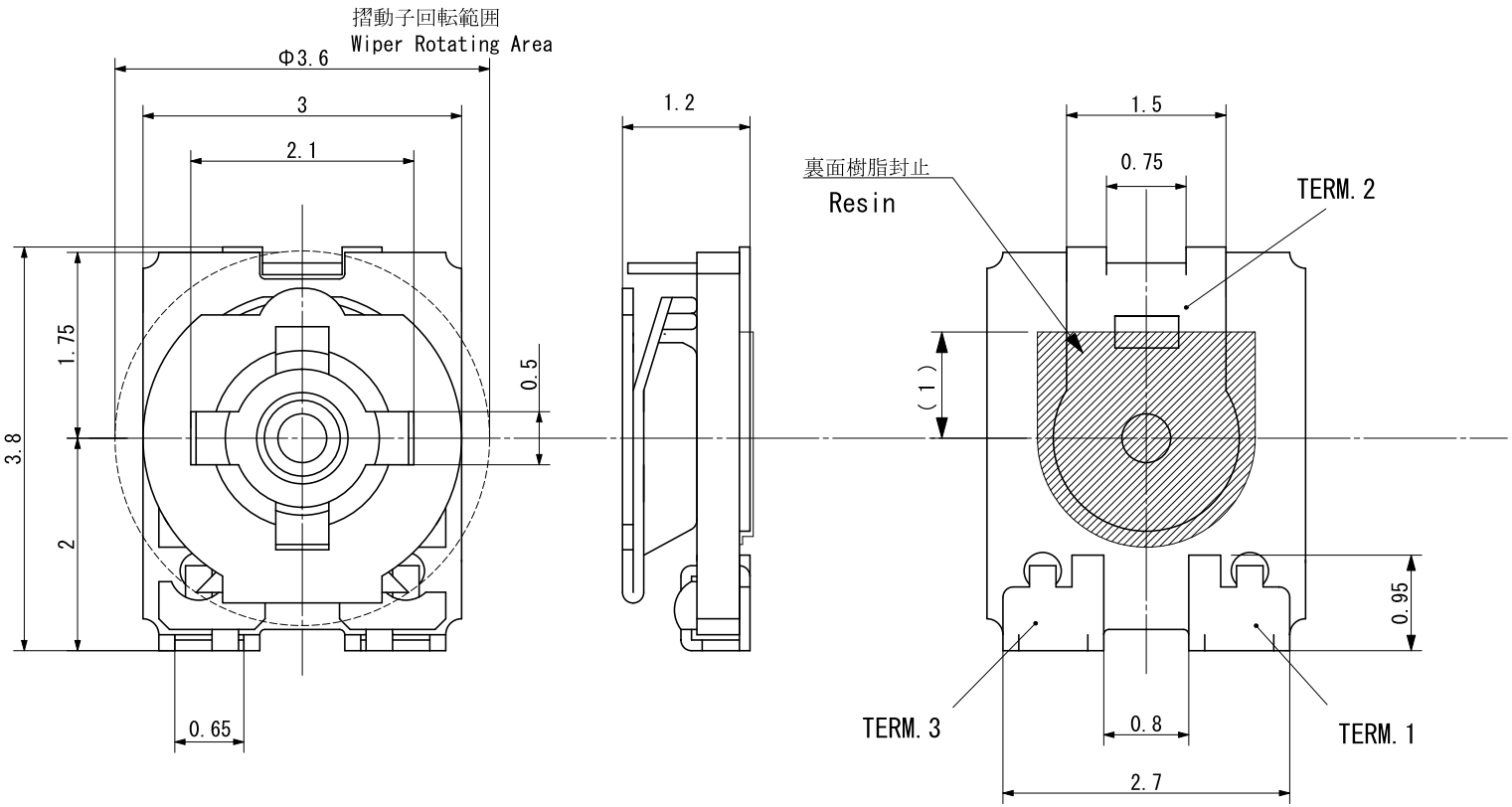

推奨ランドパターン寸法 (10/1)

PATTERN APPLICATION EXAMPLE (Scale 10/1)

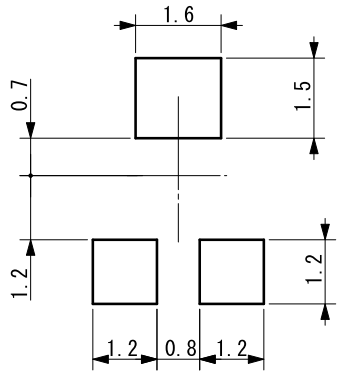

回路図

CIRCUIT

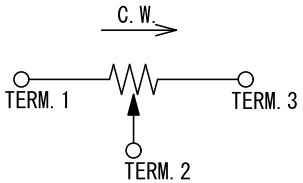

訂正箇所 REVISION PLACE	訂正年月日 REVISION DATE	訂正理由 REASON	訂正者 REVISION BY	記事/REMARK
③				
②				
①				

図法/DRAWING 第三角法 TRIGONOMETRY	単位/UNIT mm	尺度/SCALE 20/1	材料/MATERIAL	処理/DISPOSAL
種別・型名/MODEL NAME VG039NCH				
承認/APPROVED BY M. Urayama Aug.-28-'06	検図/CHECKED BY	設計/DESIGNED BY H. Takabayashi Aug.-28-'06	写図/TRACED BY	図名/DESCRIPTION 外観図 Drawing
半固定可変抵抗器 Variable Resistor	版/REV.			
一般公差 GENERAL TOLERANCE ± 0.3 mm	作成年月日 DRAWING DATE Aug./28/'06	北陸電気工業株式会社 HOKURIKU ELECTRIC INDUSTRY CO.,LTD.	図番/DRAWING No. F-362.021	

FF No. 4006B

数量：2500 個/リール

QUANTITY : 2500 pcs/REEL

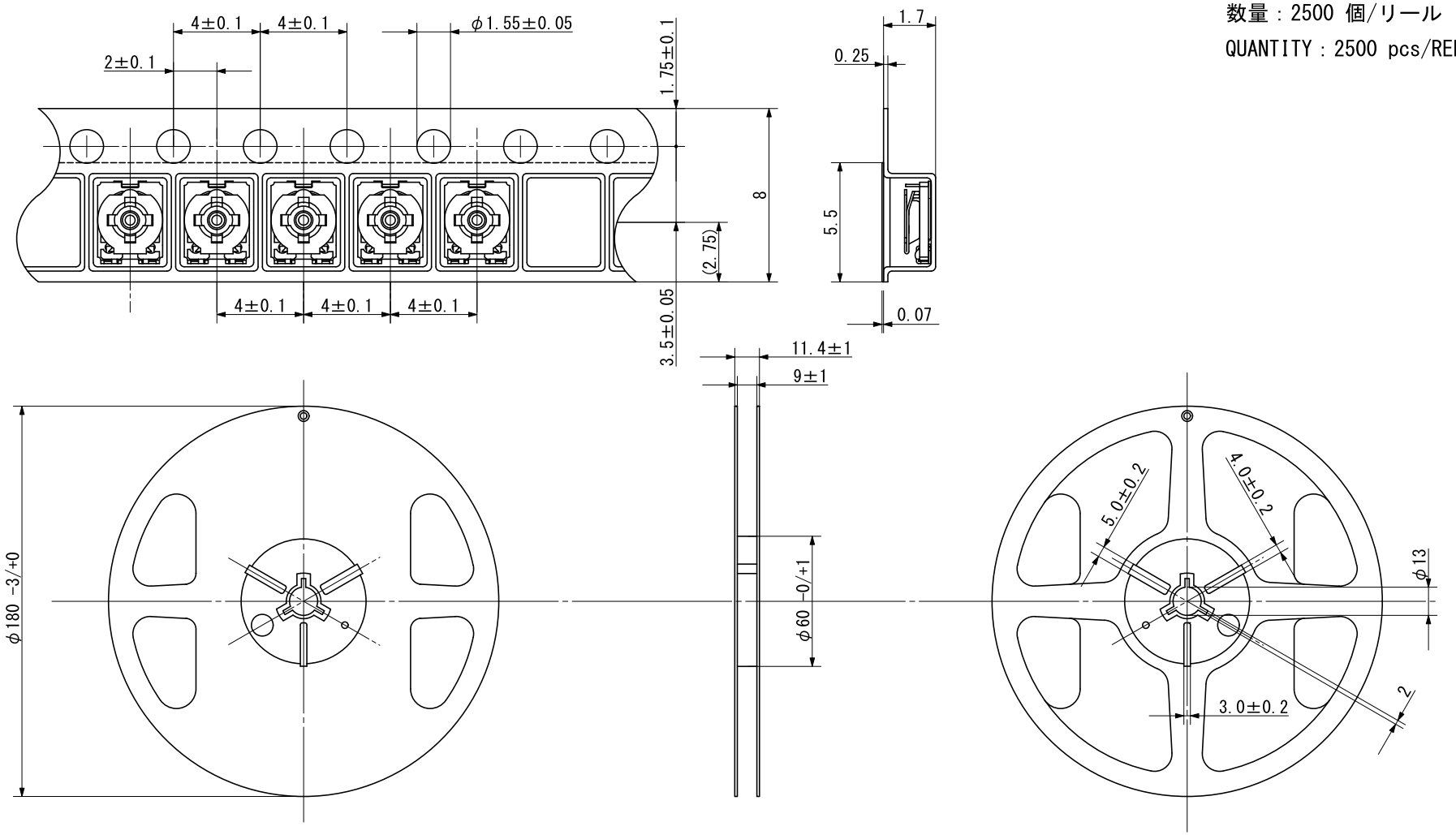

尺度 SCALE 1/2

③						
②						
①						
訂 正 REVISIONS						
承認 APPROVED 浦山 M.Urayama DATE Aug.-28-'06	検図 CHECKED DATE	設計 DESIGNED 高林 H.Takabayashi DATE Aug.-28-'06	単位：UNIT mm	尺度 SCALE 5／1	タイトル TITLE テーピングリール TAPING REEL	種別/HDK TYPE VG039NCHXT
一般公差 GENERAL TOLERANCE ± 0.3	北陸電気工業株式会社 HOKURIKU ELECTRIC INDUSTRY CO.,LTD.				HDK 図面番号 DWG No. F-362.022	版 REV.

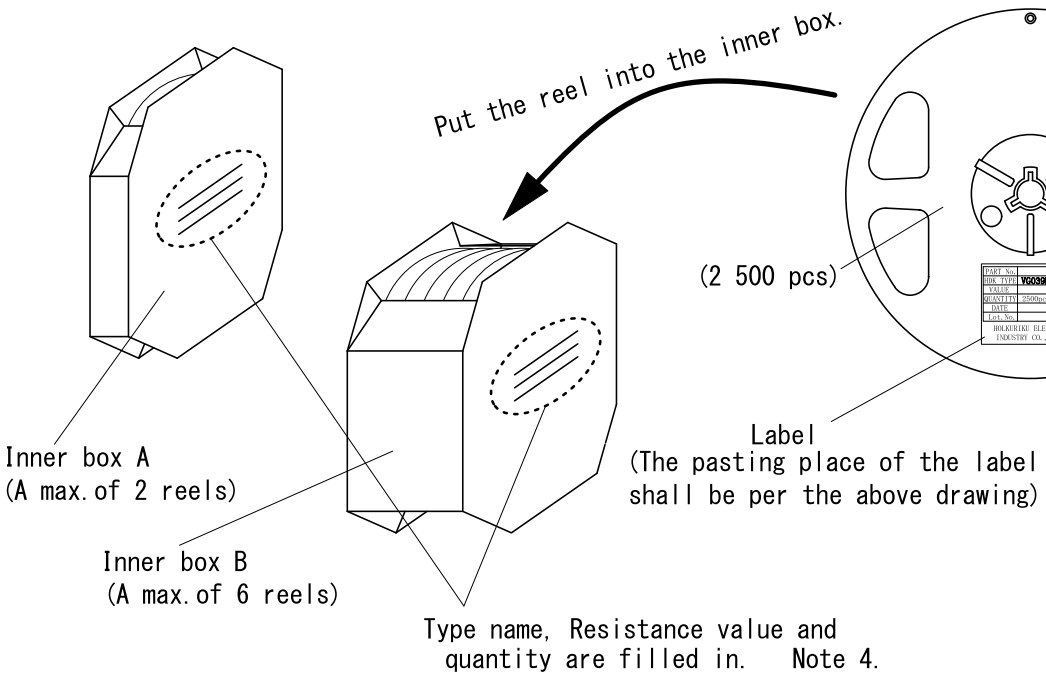

PART No.	①
HDK TYPE	VG039NCHXT
VALUE	② ohms
QUANTITY	③2500pcs ④RoHS
DATE	⑤
Lot. No.	⑥

HOLKURIKU ELECTRIC INDUSTRY CO., LTD.

Label description

①PART No. : Per customer's directions
②VALUE : Indication of the resistance value (Ex. 100)
③QUANTITY : Label for the reel
④LEADLESS SOLDER : "RoHS"
⑤Date : Indication of taping date(Ex. 02.4.18)
⑥Lot. No. : Indication of HDK manufacturing lot No. (Ex. Q-16-5-1)

Packaging Specification

	Number of the reels put in	Total Quantity of the products
Inner box A	A max of 2 reels	5 000 pcs. max.
Inner box B	A max of 6 reels	15 000 pcs. max.

	Number of the reels put in	Total Quantity of the products	Size (W*L*H) (Unit : mm)
Outer box a	A max of 6 reels	15 000 pcs. max.	290*210*90
Outer box b	A max of 12 reels	30 000 pcs. max.	505*210*90
Outer box c	A max of 24 reels	60 000 pcs. max.	400*220*180
Outer box d	A max of 48 reels	120 000 pcs. max.	400*220*330
Outer box e	A max of 30 reels	75 000 pcs. max.	390*210*225

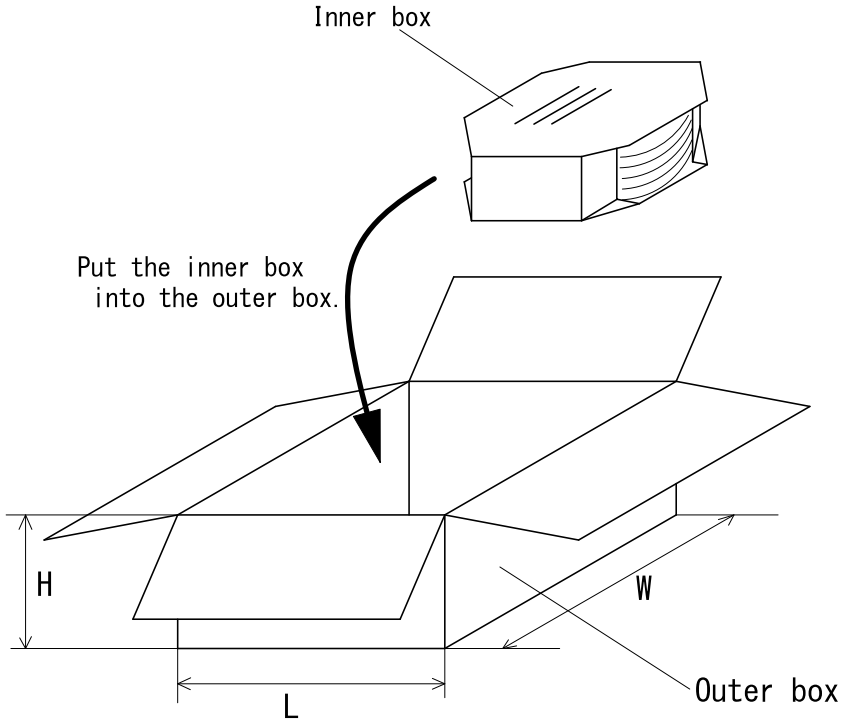

Note 1- Glue the label on the reel (The gluing position is per the drawing.)

Note 2- Cushion material is to be put in to fill the empty space when the number of the reels in an inner box does not reach 2 or 6 respectively.

Note 3- Cushion material is to be put in to fill the empty space when the total quantity in the outer box does not reach 15 000 , 30 000 , 60 000, 75 000, or 120 000 pcs. respectively.

Note 4- Type name, resistance value and quantity shall be written on a inner box.

Example : VG039NCHXT
B 1 k ohm
15 000

③						
②						
①						
REVISIONS						
DRAWN N. Kurata DATE Oct. 11, 2006	CHECKED DATE	APPROVED H. Takabayashi DATE Oct. 11, 2006	UNIT mm	SCALE 5/1	TITLE VARIABLE RESISTOR	HDK TYPE VG039NCHXT
TOLERANCE UNLESS OTHERWISE SPECIFIED ±	HOKURIKU ELECTRIC INDUSTRY CO., LTD.				HDK DWG No. R-2832	REV.