EN: This Datasheet/Document is presented by the manufacturer.

Please visit our website for pricing and availability at www.hestore.hu.

THIS DRAWING IS UNPUBLISHED. RELEASED FOR PUBLICATION -,- .
© COPYRIGHT - By - ALL RIGHTS RESERVED.

LOC	DIST
AJ	16

REVISIONS

P	LTR	DESCRIPTION	DATE	DWN	APVD
	M1	REVISED PER ECO-11-005030	11MAR11	RK	HMR

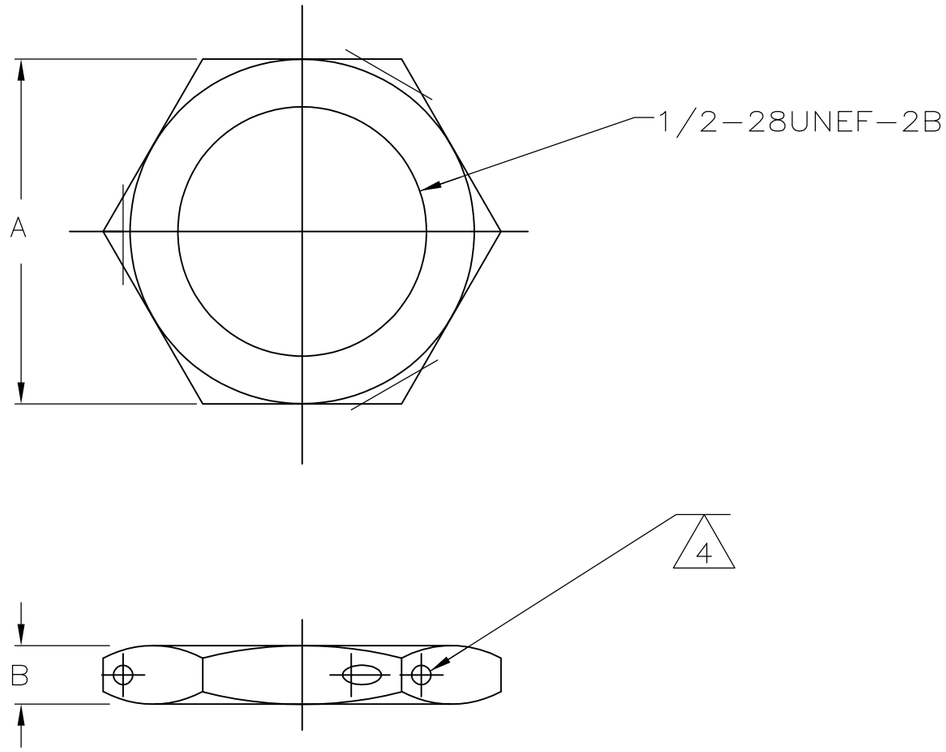

1. BRASS PER QQ-B-627.
2. SILVER PLATE PER QQ-S-365, 5.08μm[.000200] MINIMUM THICK.
3. NICKEL PLATE PER QQ-N-290, 2.54μm[.000100] MINIMUM THICK.
4. ∅0.79±0.08[.031±.003] (3 HOLES) 120° APART.
5. GOLD PLATE PER MIL-G-45204, 0.51μm[.000020] MINIMUM THICK.

B	A	HOLES	FINISH	MATERIAL	PART NUMBER
2.77[.109]	15.82[.623]	-	5	1	2-329631-2
2.77[.109]	15.82[.623]	-	3	1	2-329631-0
2.77[.109]	15.82[.623]	-	2	1	1-329631-9
2.39±0.15[.094±.006]	14.10±0.25[.555±.010]	4	2	1	1-329631-7
2.39±0.15[.094±.006]	14.10±0.25[.555±.010]	-	3	1	1-329631-2
2.39±0.15[.094±.006]	14.10±0.25[.555±.010]	-	2	1	329631

THIS DRAWING IS A CONTROLLED DOCUMENT.

DIMENSIONS: mm [INCHES]

TOLERANCES UNLESS OTHERWISE SPECIFIED:

0 PLC	± -
1 PLC	± -
2 PLC	± 0.13[.005]
3 PLC	± -
4 PLC	± -
ANGLES	± -

MATERIAL 1

FINISH 2 & 3

DWN	P. ALSEDEK 16MAY90
CHK	R.E. RUTH 06SEP90
APVD	M. PHILLIPS 20SEP90
PRODUCT SPEC	—
APPLICATION SPEC	—
WEIGHT	[.030 oz]

TE Connectivity

NAME: JAM NUT —

SIZE	CAGE CODE	DRAWING NO	RESTRICTED TO
A3	00779	C-329631	—

CUSTOMER DRAWING

SCALE 4:1 SHEET 1 OF 1 REV M1