HESTORE.HU
elektronikai alkatrész áruház

EN: This Datasheet is presented by the manufacturer.

Please visit our website for pricing and availability at www.hestore.hu.

FOR 客户名称	APPROVED 客户确认签字	ATTN 销售负责人

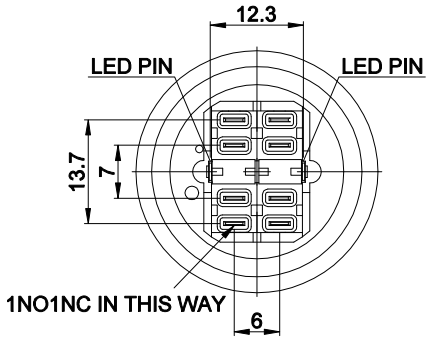

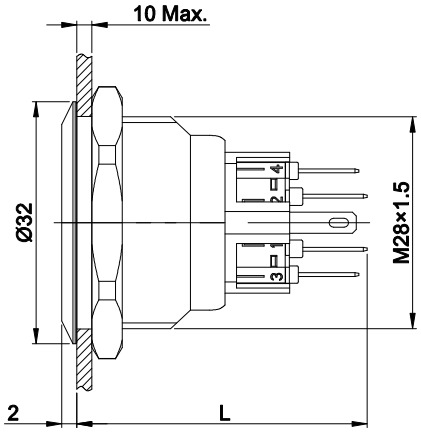

L: MOMENTARY IS 38.4;
LATCHING IS 40.8.

THE SHADED PART IS ILLUMINATED

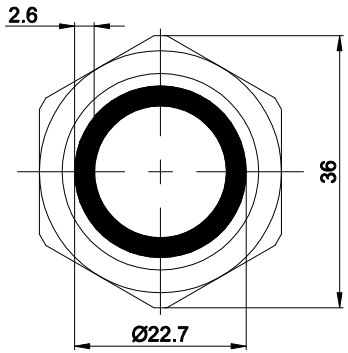

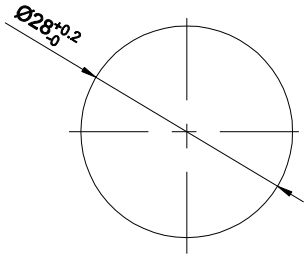

PANEL CUTOUT

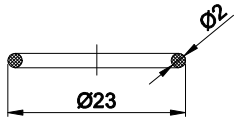

SEAL RING

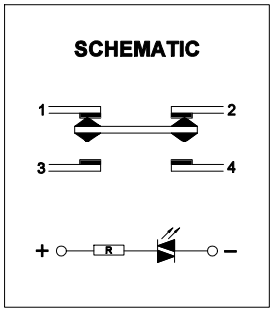

DOUBLE-BREAKPOINT SNAP-ACTION CONTACT SWITCH WITH FOUR TERMINALS

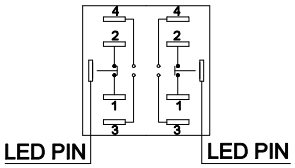

CONTACT COMPOSITION
1、2、3、4 ARE ONE SET.
1,2 ARE NORMAL CLOSED(NC);
3,4 ARE NORMAL OPENED(NO).

PART NUMBER:GQ28-□■E/△/▲/S/※

"□"	CONTACT STRUCTURE
11	1NO1NC
22	2NO2NC

"■"	OPERATION MODE
NO LETTER	MOMENTARY
Z	LATCHING

"△"	LAMP COLOR
R	RED
G	GREEN
Y	YELLOW
B	BLUE
W	WHITE

"▲"	LAMP VOLTAGE
6V	AC/DC 6V
12V	AC/DC 12V
24V	AC/DC 24V
110V	AC/DC 110V
220V	AC/DC 220V
OTHER VOLTAGE CAN BE MADE TO ORDER	

"※"	PROTECTION DEGREE
NO LETTER	IP65
FP	IP67(MOMENTARY)

SPECIFICATIONS:
1.SWITCH RATING: Ui:250V, Ith:5A.
2.MECHANICAL LIFE: ≥1,000,000 cycles.
3.ELECTRICAL LIFE: ≥50,000 cycles.
4.CONTACT RESISTANCE: ≤50mΩ.
5.INSULATION RESISTANCE: ≥100MΩ(500VDC).
6.POWER-FREQUENCY WITHSTAND VOLTAGE: 1,500V, RMS 50Hz, 1min.
7.OPERATING TEMPERATURE: -25˚C～ +55˚C(NO FREEZING, KEEP THE AIR FLOWING AROUND PUSHBUTTON).
8.OPERATING FORCE: ABOUT 4N(1NO1NC)/ABOUT 7.5N(2NO2NC).
9.OPERATING TRAVEL: ABOUT 2.5mm.
10.TORQUE: ABOUT 1.2N·m APPLIED TO NUT.
11.FRONT PANEL PROTECTION DEGREE: IP65(IP67 MOMENTARY CAN BE CUSTOMIZED), IK10.
12.TERMINAL TYPE: PIN TERMINAL(2.8X0.5mm).
13.GENERAL TOLERANCE:0-18mm=±0.25, 18-80mm=±0.52.
14.RoHS CAN BE CUSTOMIZED.
15.COMPLIANT WITH RoHS.

MATERIALS:
1.CONTACT: SILVER ALLOY.
2.BUTTON: STAINLESS STEEL/PC.
3.BODY: STAINLESS STEEL.
4.BASE: PA.

BRAND 品牌	红波按钮制造有限公司 ONPOW PUSH BUTTON MANUFACTURE CO.,LTD.		
TITLE 名称	GQ SERIES ANTI-VANDAL PUSH BUTTON	UNIT 单位	mm
DWG NO. 图号	GQ28-E	SCALE 比例 1 : 1	SIZE 图纸 A4
FILE NAME 档案名称 GQ28-E.DWG	DRAWN 制图 YDY 2023/12/22	SHEET 张 1/1	REV. 更改 1