EN: This Datasheet/Document is presented by the manufacturer.

Please visit our website for pricing and availability at www.hestore.hu.

THIS DRAWING IS UNPUBLISHED. RELEASED FOR PUBLICATION -,- .
© COPYRIGHT - By - ALL RIGHTS RESERVED.

LOC	DIST
AF	50

REVISIONS

P	LTR	DESCRIPTION	DATE	DWN	APVD
	C1	REVISED PER ECR-20-009164	23JUL2020	MK	DH

1 CONTINUOUS STRIP ON REELS.

2 WIRE SIZE IS [#18-#14] AWG.

3 INSULATION RANGE IS 2.79-4.06 [.110-.160] DIA.

4 MATING TAB THK IS 0.53-0.48 [.021-.019].

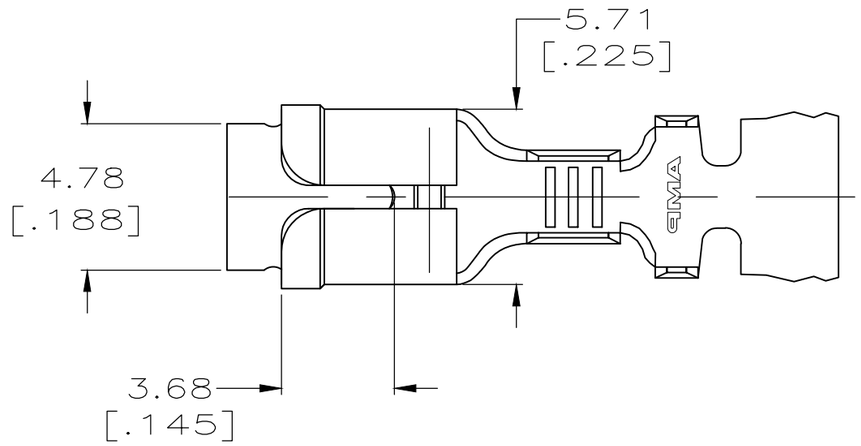

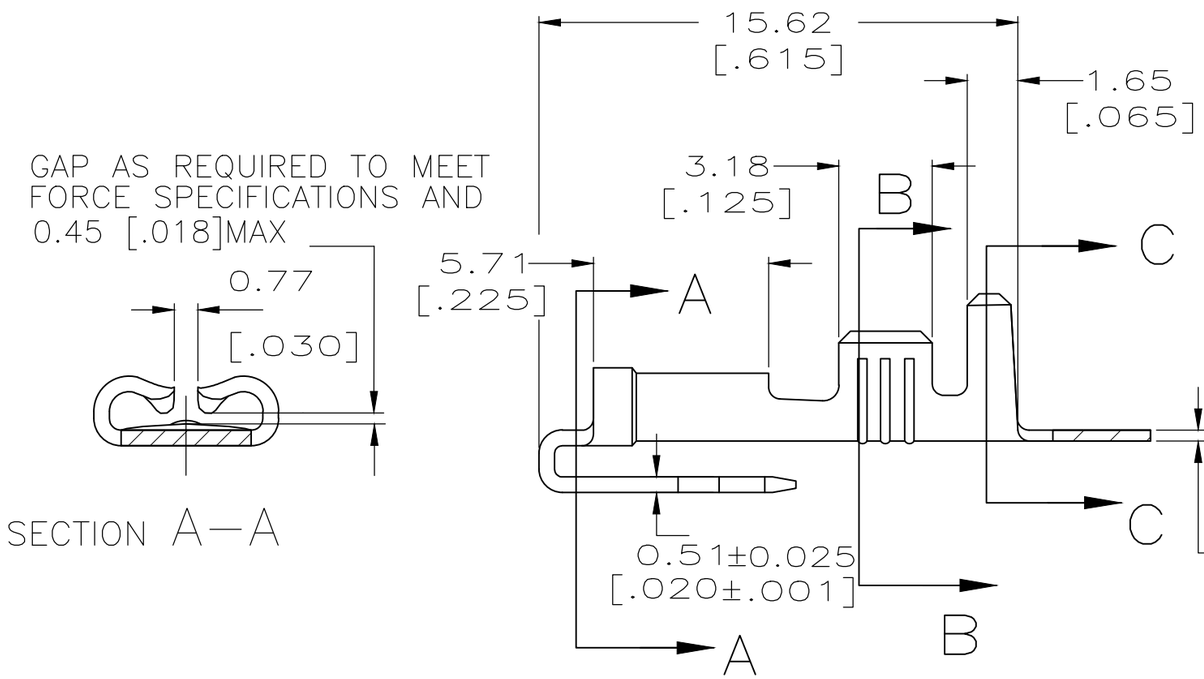

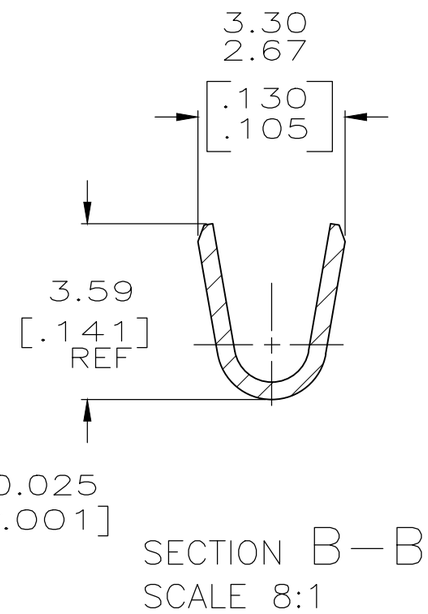

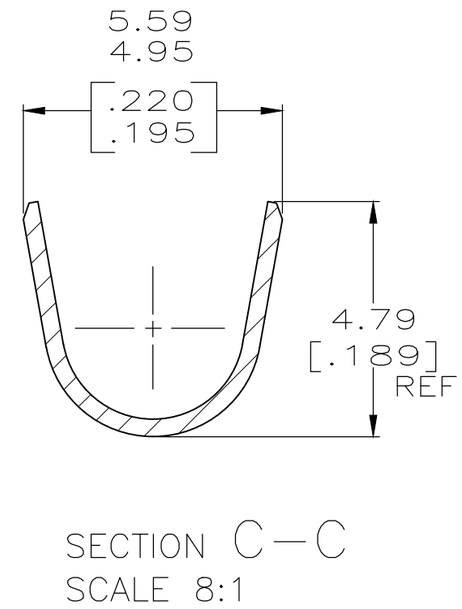

1217151-1

PART NO.

THIS DRAWING IS A CONTROLLED DOCUMENT.

DIMENSIONS: mm [INCHES]

TOLERANCES UNLESS OTHERWISE SPECIFIED:

0 PLC	± -
1 PLC	± -
2 PLC	± 0.25 [.010]
3 PLC	± -
4 PLC	± -
ANGLES	± -

MATERIAL: BRASS

FINISH: TIN

DWN	JR RUTH	6MAY99
CHK	MS FEHER	6MAY99
APVD	S HEADER	6MAY99
PRODUCT SPEC	—	
APPLICATION SPEC	—	
WEIGHT	—	

TE Connectivity

NAME: RECEPTACLE, PIGGYBACK, FASTON, 4.75 [.187] SERIES

SIZE	CAGE CODE	DRAWING NO	RESTRICTED TO
A3	00779	C-1217151	—

CUSTOMER DRAWING

SCALE	SHEET	REV
5:1	1 OF 1	C1